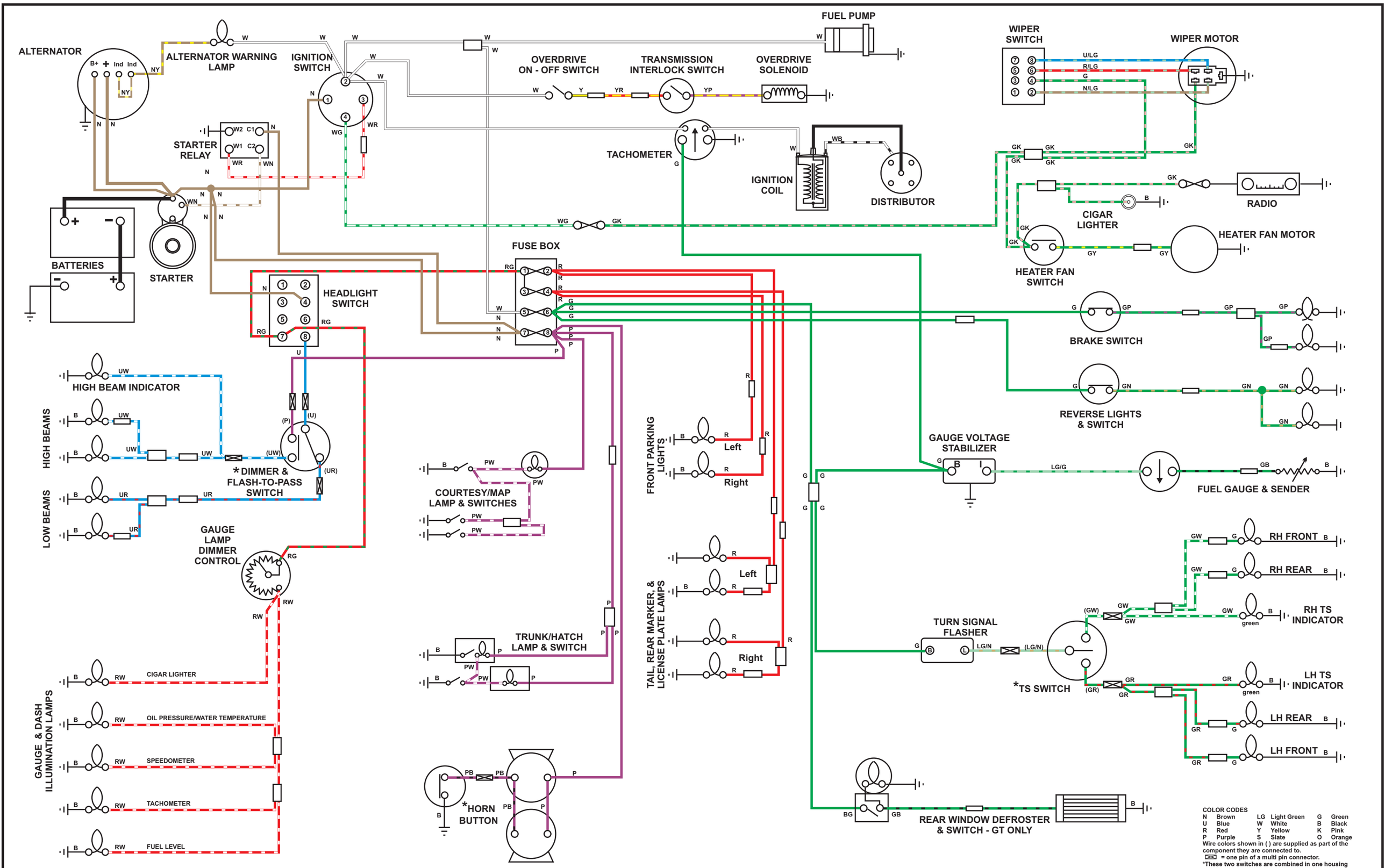

DIAGRAM 6 - 70/71 MGB FROM BENTLEY E3212W